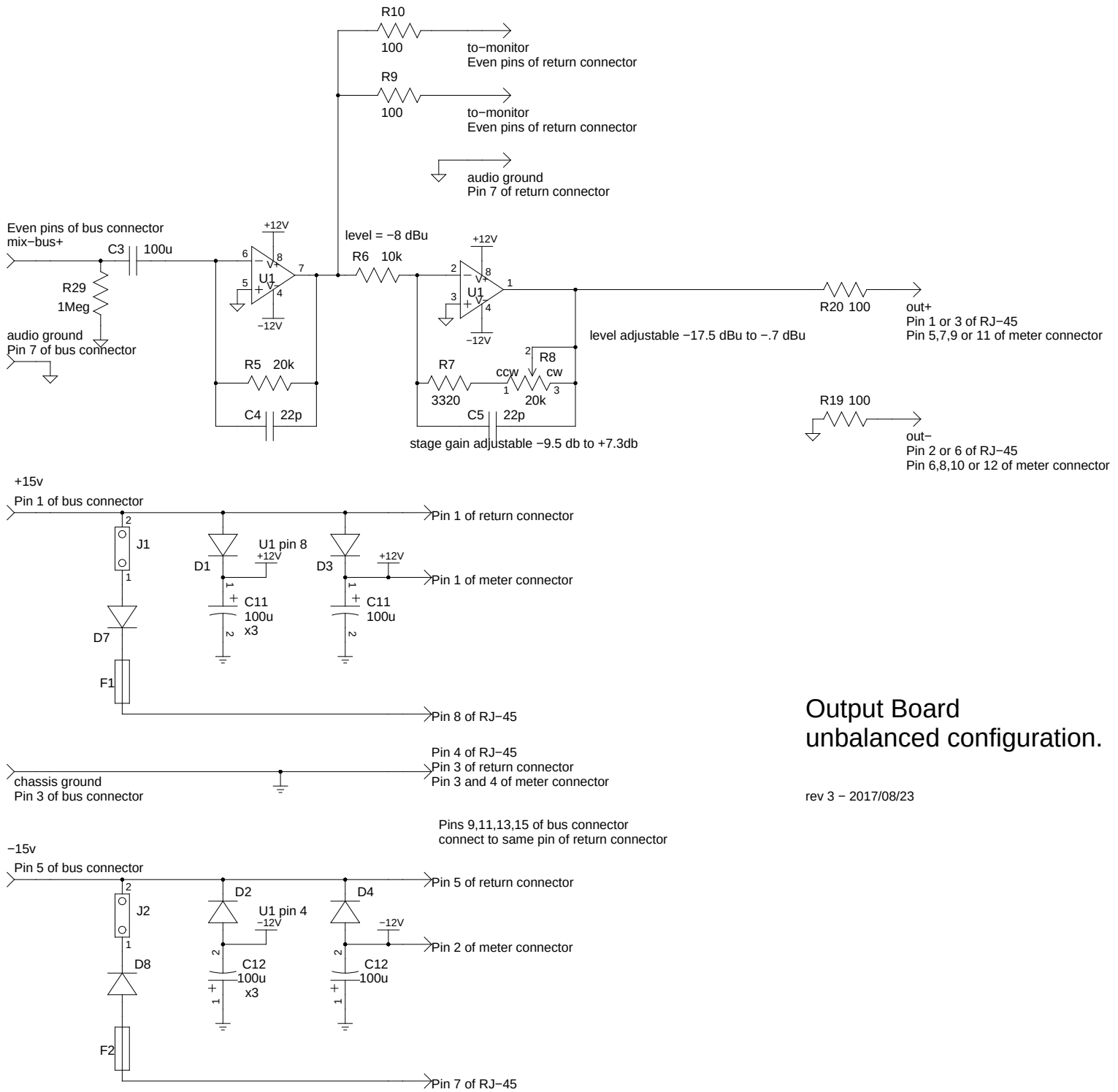

Output Board
unbalanced configuration.

rev 3 − 2017/08/23